Tritech Gemini 1200id

High resolution, dual frequency forward-looking imaging multibeam sonar

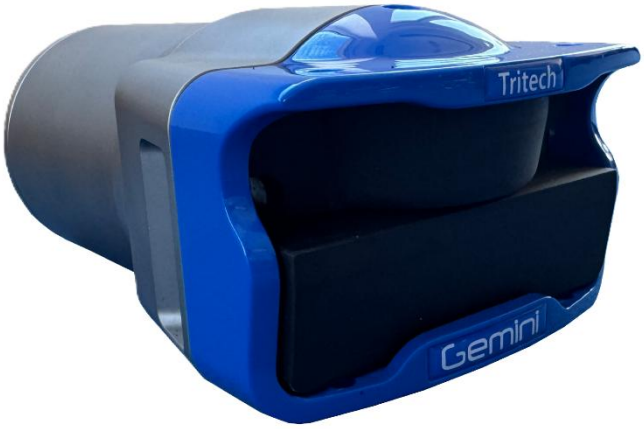

The Gemini 1200id multibeam sonar is engineered for advanced underwater imaging and target detection. It operates on two acoustic frequencies:

- **720 kHz** for long-range target detection
- **1200 kHz** for high-resolution imaging

This dual-frequency capability allows operators to switch between extended range and enhanced detail depending on mission requirements. The Gemini 1200id shares the same physical dimensions and connection interface as the Gemini 720is, ensuring compatibility and providing a straightforward upgrade path to higher-resolution imaging without changes to existing mounting or cabling.

Key Features

- Switch between 720 kHz and 1200 kHz
- Wide 120° horizontal field of view
- CHIRP processing
- Integrated speed-of-sound sensor for accurate ranging
- Real-time video-like imagery
- Long range object detection
- Short range detailed imaging
- Same size and interfaces as the Gemini 720is

Norwegian Offshore Rental AS | PO Box 2143, 5504 Haugesund | Eikeskogveien 54, 5570 Aksdal, Norway | +47 47 47 52 30 | post@offshorerental.no | **offshorerental.no**

Specifications

Depth rating	4000m / 13123 ft
Weight in air	5.0 kg / 11.0 lbs
Weight in water	3.0 kg / 6.6 lbs
Operating frequency	720 kHz or 1200 kHz
Angular resolution	1.0° acoustic, 0.25° effective (720kHz) or 0.6° acoustic, 0.12° effective (1200kHz)
Range	0.1 m - 120 m / 4 in - 394 ft (720kHz) or 0.1 m - 50 m / 4 in - 164 ft (1200kHz)
Supply voltage	19 to 74 Vdc
Power requirements	16 - 27 W (range dependent)
Main port protocol	Ethernet or VDSL
Update rate	5 – 40 Hz (range dependent)

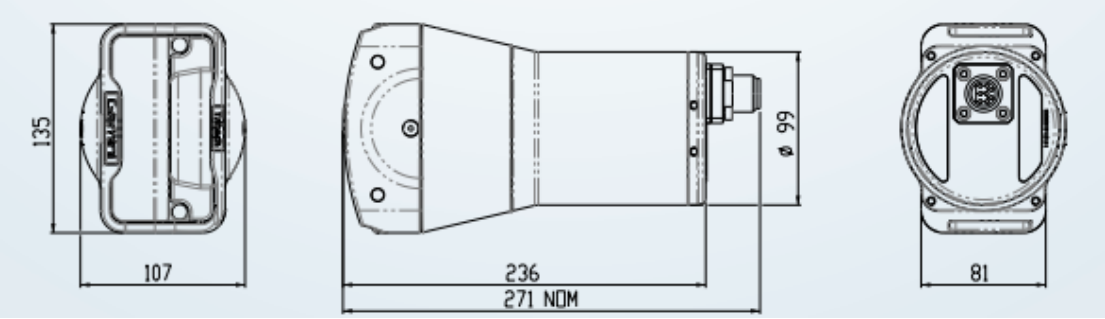

Norwegian Offshore Rental AS | PO Box 2143, 5504 Haugesund | Eikeskogveien 54, 5570 Aksdal, Norway | +47 47 47 52 30 | post@offshorerental.no | **offshorerental.no**